Dragon as an In-Orbit Servicing Platform

International Workshop on On-Orbit Satellite Servicing

March 25, 2010
Max Vozoff
Director, Civil Business Development

SpaceX Vehicles

Falcon 1

Falcon 9

Dragon Spacecraft

SpaceX Overview

- Founded in mid-2002 with the singular goal of providing highly reliable, low cost space transportation for both cargo and crew
- Over 940 employees and growing
- 51,000 sq m (550,000 sq ft) of offices, manufacturing and production in Hawthorne (Los Angeles), California
- 121 hectares (300 acre) state-of-the-art Propulsion and Structural Test Facility in central Texas
- Launch sites at Kwajalein and Cape Canaveral
- Developing launch site at Vandenberg

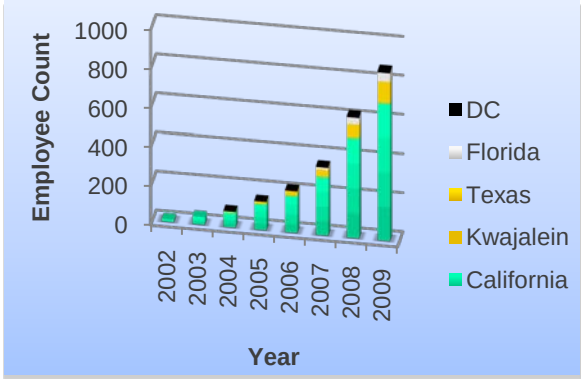

Omelek, Kwajalein Atoll

Hawthorne (Los Angeles) Headquarters

Central Texas

SLC-40, Cape Canaveral

Falcon 9 Capabilities

- Inaugural flight from Cape Canaveral in early 2010
- Lowest mission price in this vehicle class
  - Greater than a factor of 5 cost reduction compared to our domestic competitors
- Two-stage EELV-class launch vehicle
  - Designed to meet NASA man-rated safety margins and failure tolerances
  - Engine-out reliability
- 1st Stage powered by 9 Merlin engines
  - Over 4.9 MN (1.1 million lbf) thrust in vacuum
- 2nd Stage powered by Merlin Vacuum engine
  - 42.7 kN (96,000 lbf) thrust in vacuum
- Diameter 3.6 m (12 ft); Length 55 m (180 ft)
- Payload capability (Block 2)
  - 5.2 m (17 ft) fairing
  - 10,500 kg to LEO

All structures, engines, most avionics and all ground systems designed and mostly built by SpaceX

Falcon 9 Flight 1 – Feb. 10, 2010

F9-001 Ready for Integration at Launch Pad

Falcon 9 Flight 1 – Feb. 17, 2010

Falcon 9 Flight 1 – Feb. 20, 2010

Dragon Spacecraft

Nosecone

Jettisoned after stage separation.

Capsule – fully recoverable

Contains pressurized cargo, experiments or crew, hatches, thrusters & propellant, parachutes and heat shield.

Trunk – not recoverable

Contains unpressurized cargo and small deployable satellites. Supports solar panels, thermal radiator. Jettisoned before reentry.

Dragon is also designed for crew

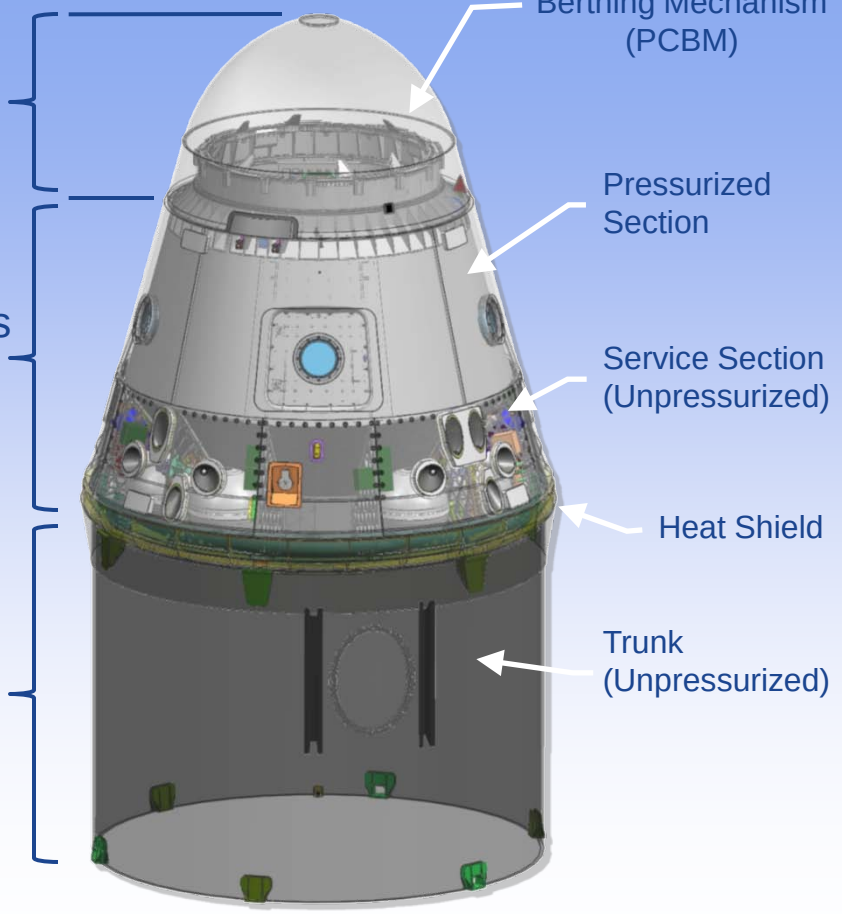

Total Payload Capacity: 6,000 kg to LEO

Capsule Down-mass Capability: 2500 kg

Dragon Spacecraft Applications

NASA's "COTS" Program

- Commercial Orbital Transportation Services
- SpaceX receives $278M over 3.5 years
- Demonstrates cargo services to and from the ISS

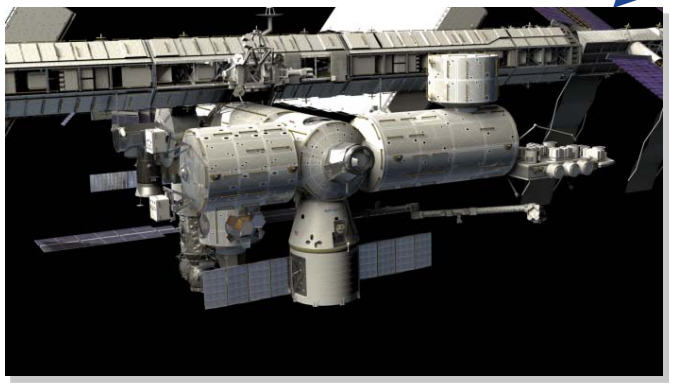

NASA's "CRS" Program

- Commercial Resupply Services
- SpaceX awarded $1.6B for 12 cargo missions, 2010 – 2015
- Minimum of 20,000 kg delivered
- Option for additional missions

SpaceX's "DragonLab" Program

- Free-flying recoverable platform for microgravity research & technology demo
- Regular, frequent, commercial access to space
- First mission in early 2011

Dragon Concept of Operations – ISS Cargo

ISS Cargo Accommodations

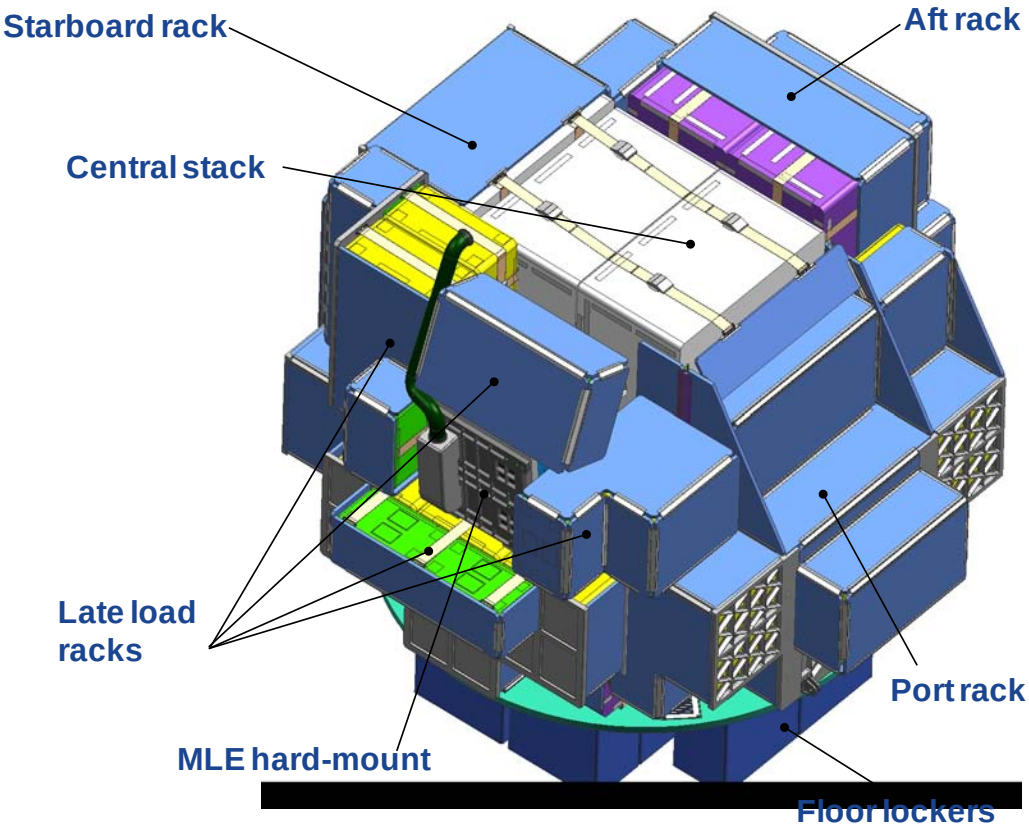

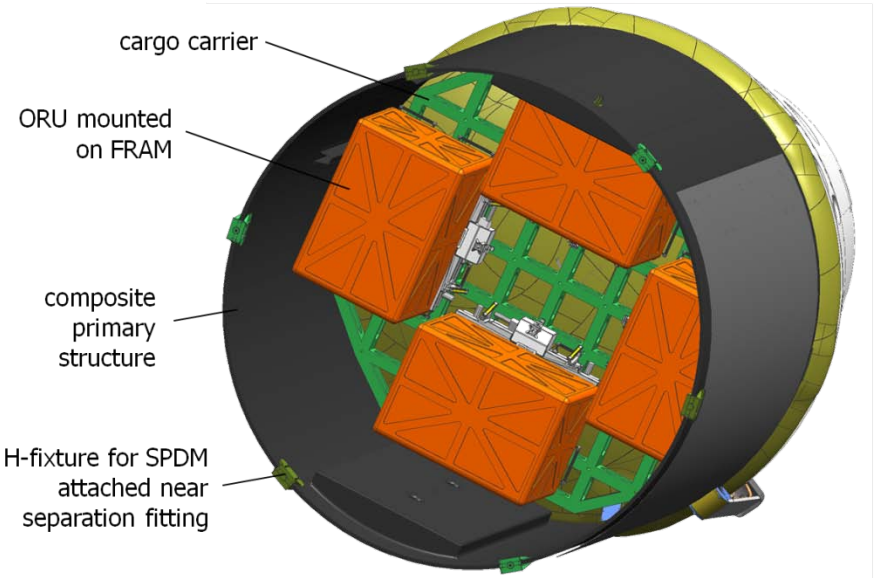

Supports payload power, data and thermal services both inside and outside the pressurized section

Dragon as a Spacecraft Bus

Dragon is a powerful generic spacecraft bus

- Volume:
  - Pressurized volume (~15 m^3) for crew or pressurized cargo
  - Trunk (non-recoverable) external volume (14-34 m^3) for instruments, tools etc.
- Power: >2000 W for payloads (>4000 W peak)
- Communications: up to 300 Mbps downlink; 300 kbps uplink
- Data: RS-422, 1553 and Ethernet payload interfaces
- Thermal: active thermal control for payloads (pumped fluid loops & heaters)
- Mission duration: From days to >2 years
- Payload Mass Capacity:
  - >6000 kg at 200 km circular
  - >2400 kg at 600 km circular
  - >1000 kg at 300 x 2000 km
- **Total Mission Cost ~$80M**
  - Incl. launch vehicle, spacecraft, operations & recovery
  - Includes structures, propulsion, avionics, GNC, power, communications, thermal control, environmental control, **PLUS up to 6000 kg of payload**

- Generically applicable to Rendezvous & Inspection; Situational Awareness; Robotic Servicing
- Can support both robotic and crewed servicing options

Dragon for Robotic Servicing Missions

Dragon already performs most of the functions required from an on-orbit robotic servicing platform

- Proximity sensing (Flash LIDARs)
- Relative (& absolute) navigation
- Guidance & control, including autonomy, holds, aborts etc.
- Precision maneuvering in close proximity to high-value asset
- 2-fault tolerance to critical hazards
- Rate nulling inside prescribed capture box
- Free-drift mode
- Autonomous & remote control modes (crew control for crewed missions)
- ~450 m/s delta-v capability (at max. payload)
- Recoverable capsule - offers return of instruments, tools & servicing hardware even for robotic missions
- Provides power, data and thermal services for payloads (robotics, instruments, etc.)

Dragon for Human Servicing Missions

Both Falcon 9 & Dragon designed from inception for crew transportation

- Preliminary designs exist for 5 & 7 seat crew configurations for ISS crew transportation
- 3 seat + pressure suits & EVA equipment can also be accommodated
- Egress/ingress via top hatch
  - Standard ISS CBM hatch - 50” square
- No air-lock
  - Would require consumables to replenish cabin air
- Servicing tools & instruments can be housed in the trunk
- Limited ability to return old instruments (trunk is not recoverable)

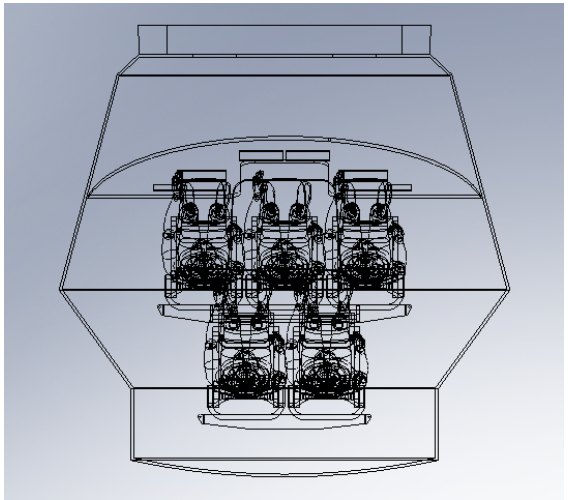

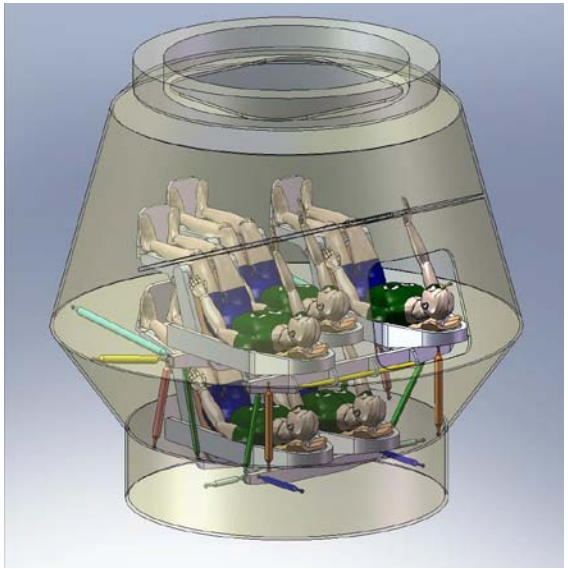

HST De-orbit Mission

- LIDS interface
- Propulsion module in trunk, similar to that previously studied

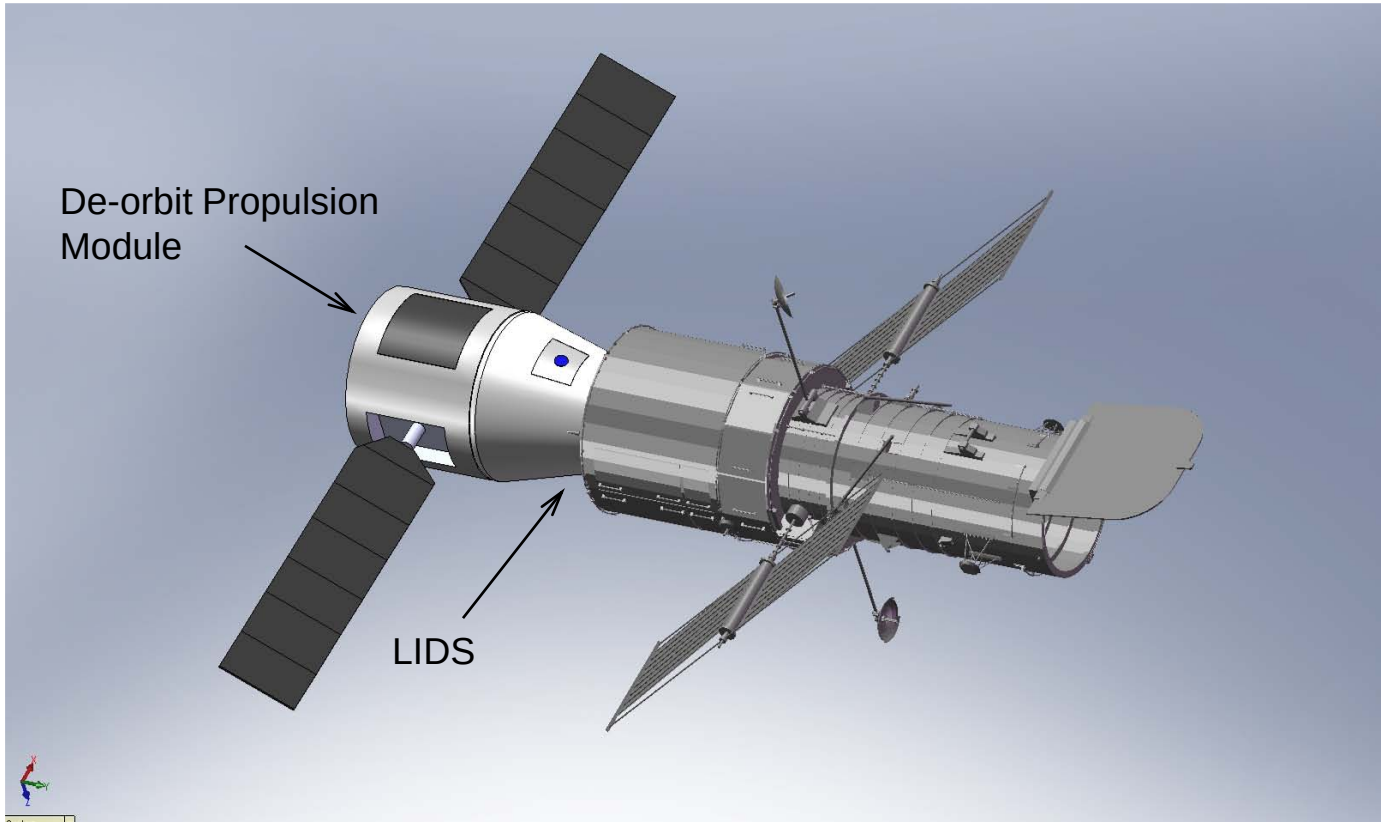

HST Servicing Case Study (1 of 9)

Servicing & re-boost/de-orbit module mission

- Payload consists of Robotic Arm, replacement instruments & De-orbit Module
- Arm housed on outside of trunk structure

1. Jettison Robotic Arm Cover along with Solar Array Doors
2. Deploy Solar Arrays

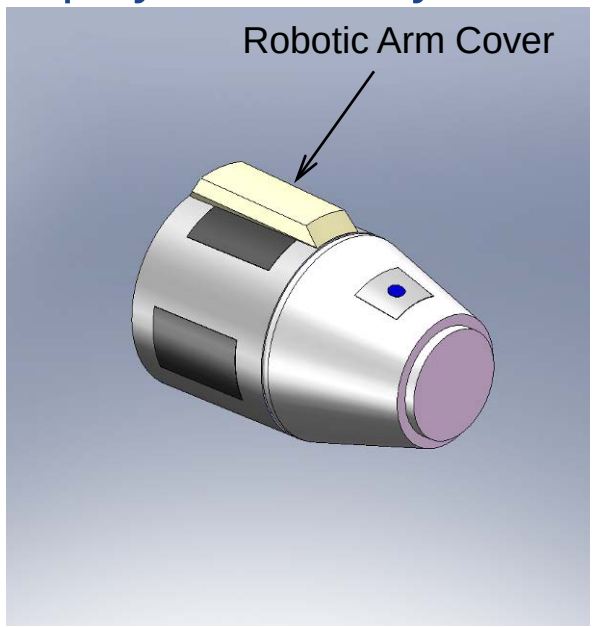

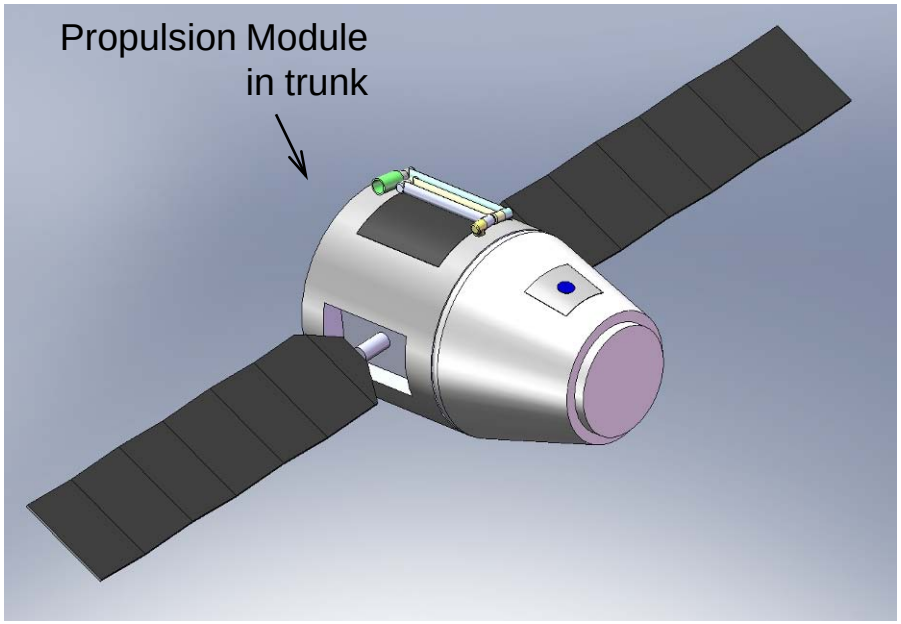

HST Servicing Case Study (2 of 9)

3. Deploy Arm
4. Jettison Cargo Door
5. Retract Arm

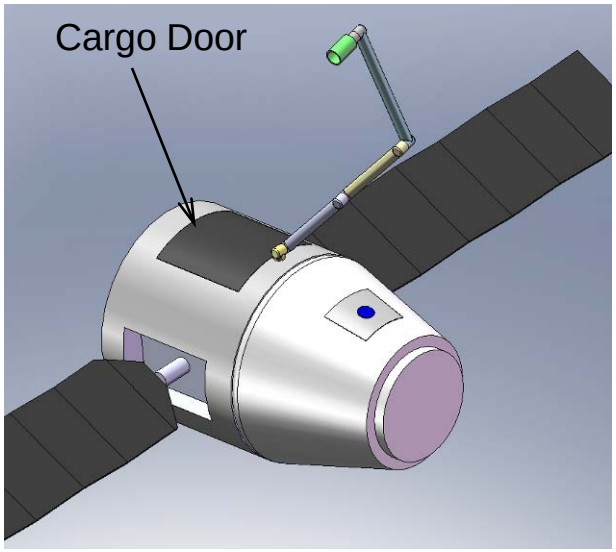

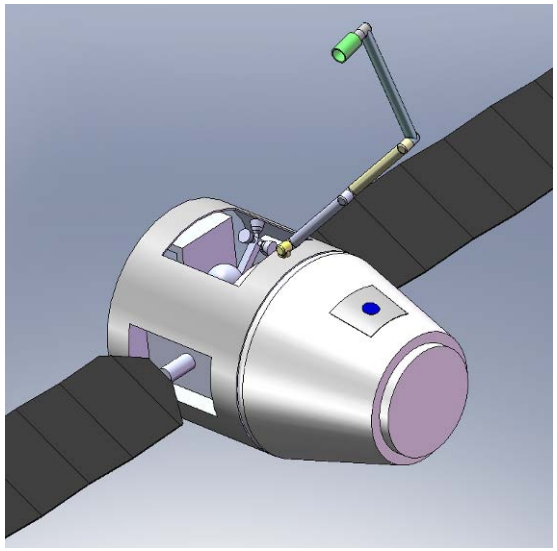

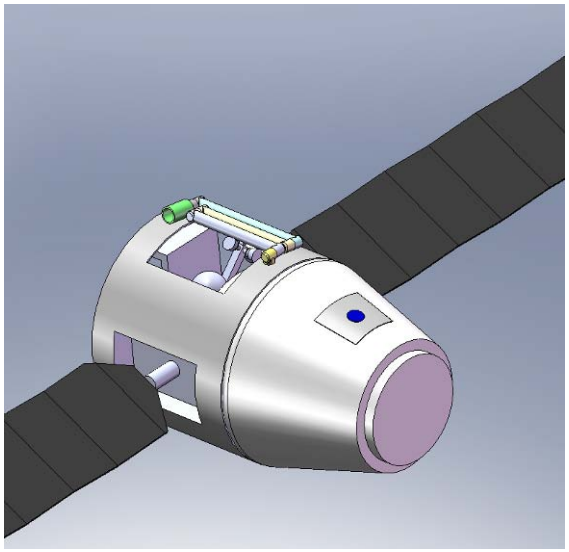

HST Servicing Case Study (3 of 9)

6. Rendezvous and Proximity operations with target
7. Deploy Arm

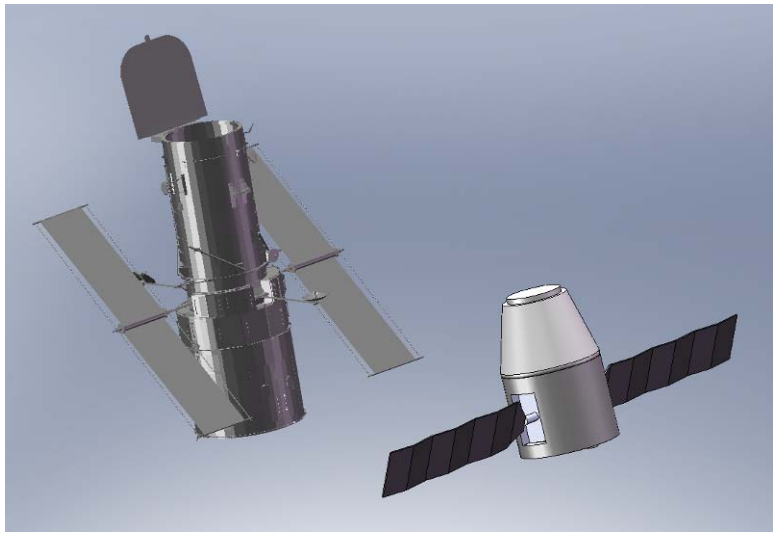

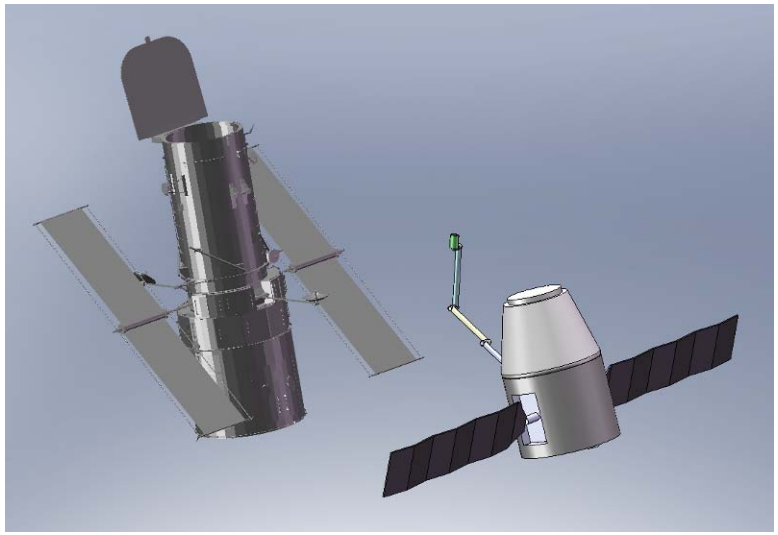

HST Servicing Case Study (4 of 9)

8. Grapple & capture target

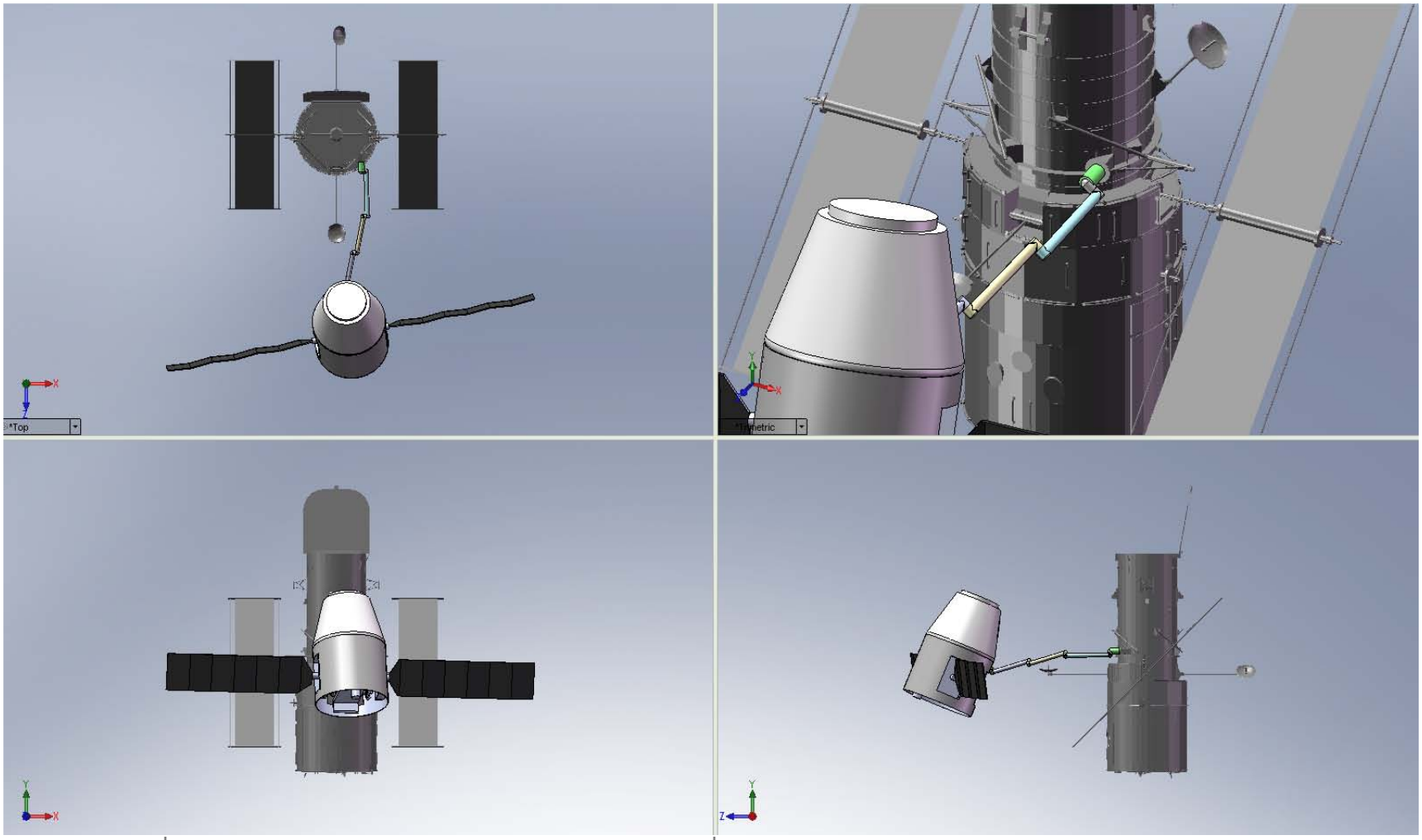

HST Servicing Case Study (5 of 9)

9. Deploy Propulsive Module with LIDS adapter
10. Berth with Hubble – provides dock for further operations

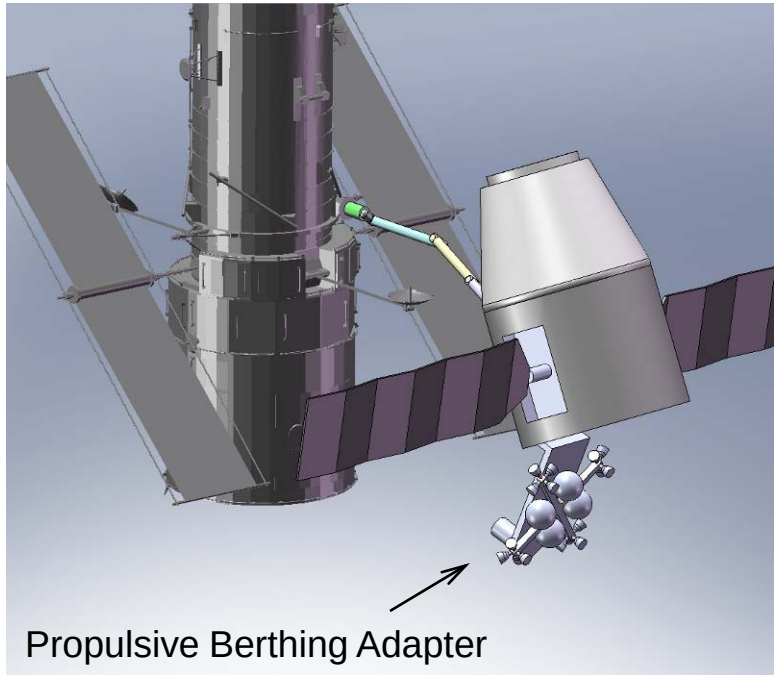

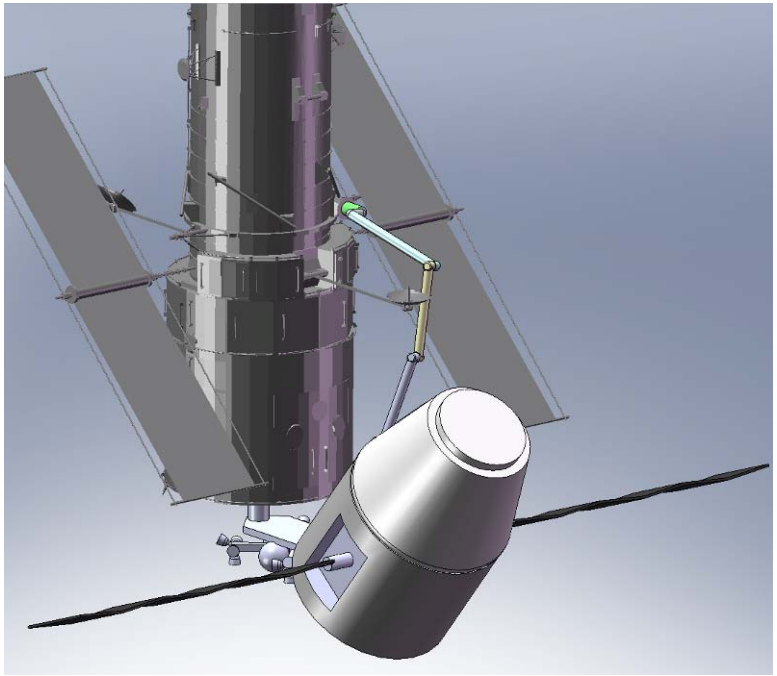

HST Servicing Case Study (6 of 9)

11. Release grapple and reorient for servicing operations
12. Remove old instruments and discard or install in trunk

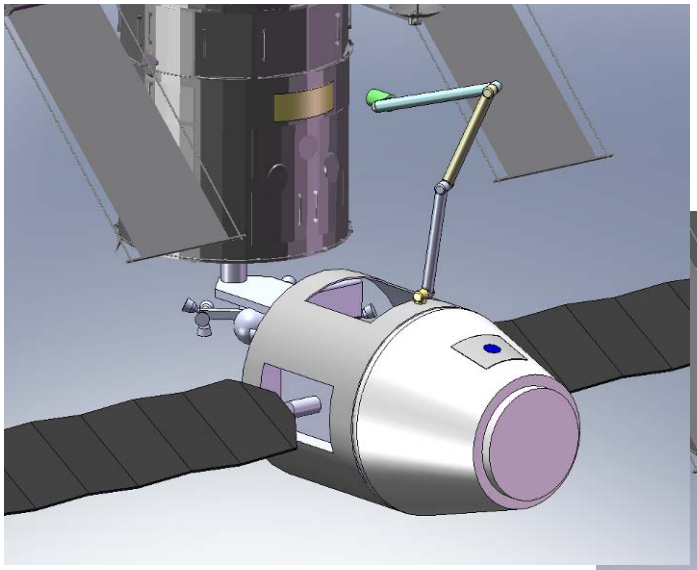

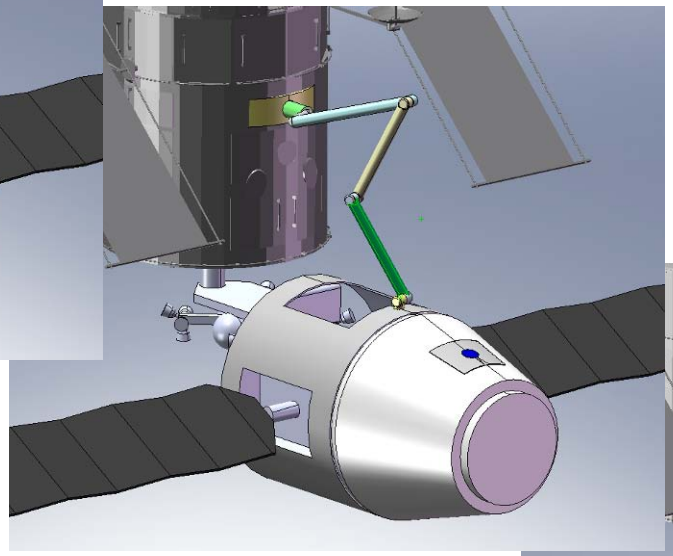

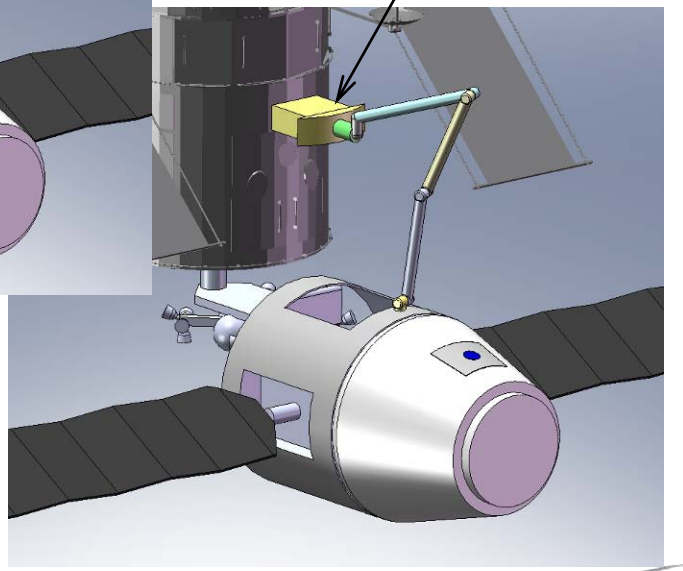

HST Servicing Case Study (7 of 9)

13. Remove new instrument from trunk
14. Install in Hubble

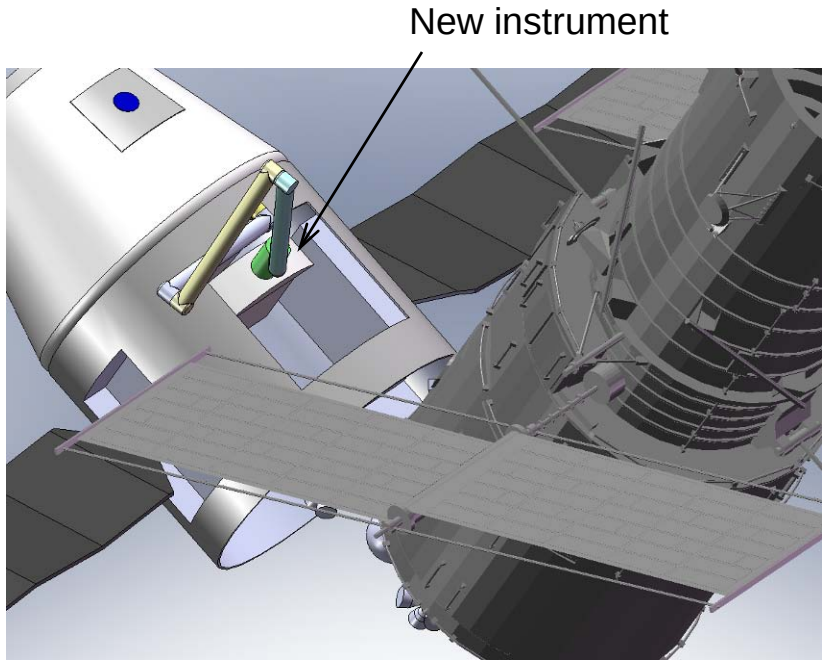

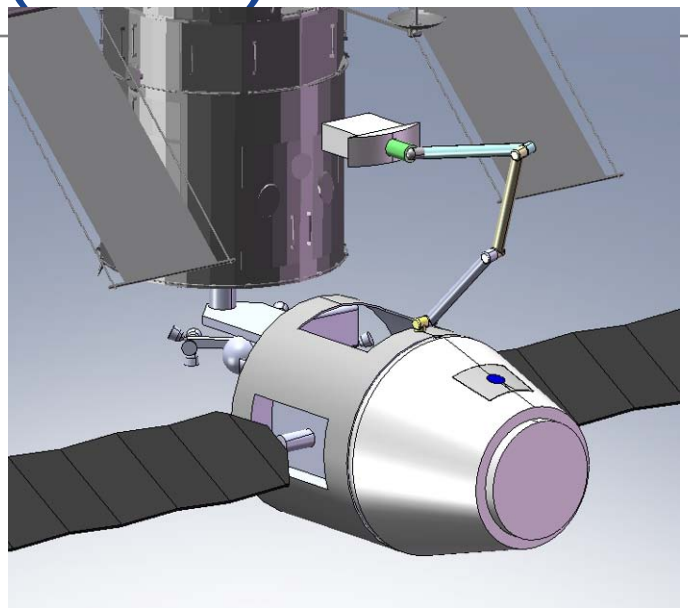

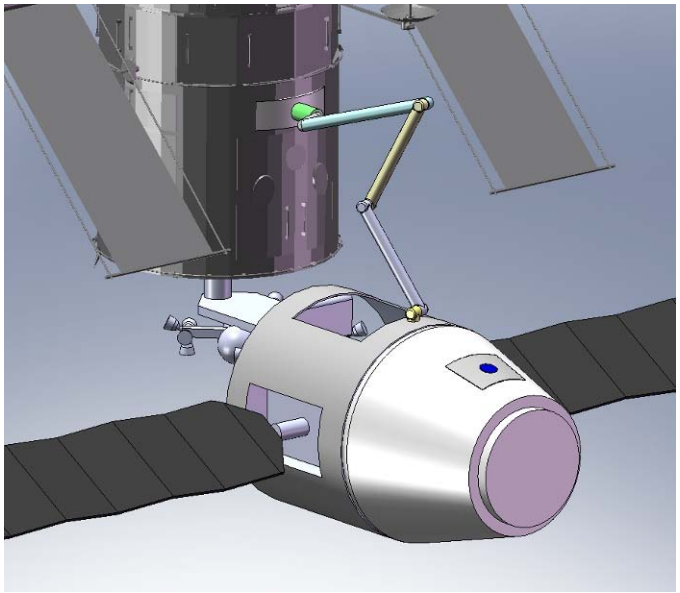

HST Servicing Case Study (8 of 9)

15. Reorient and reattach arm to grapple fixture
16. Detach Propulsion Module from trunk and use arm to move Dragon away

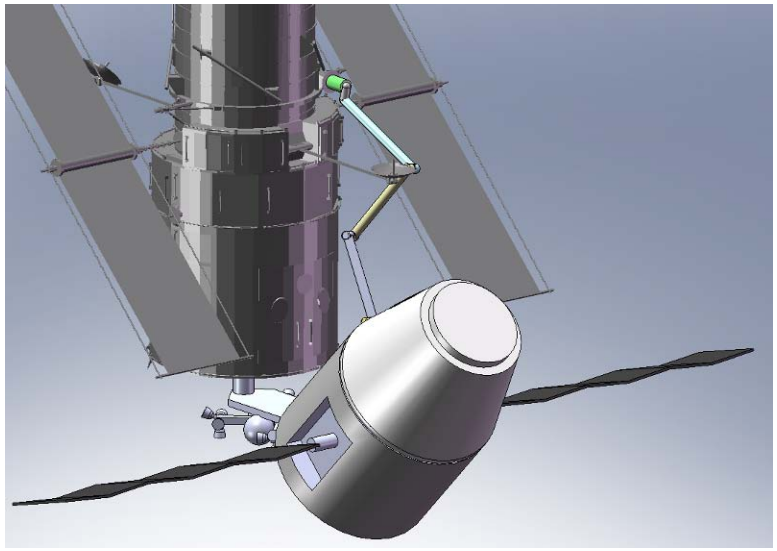

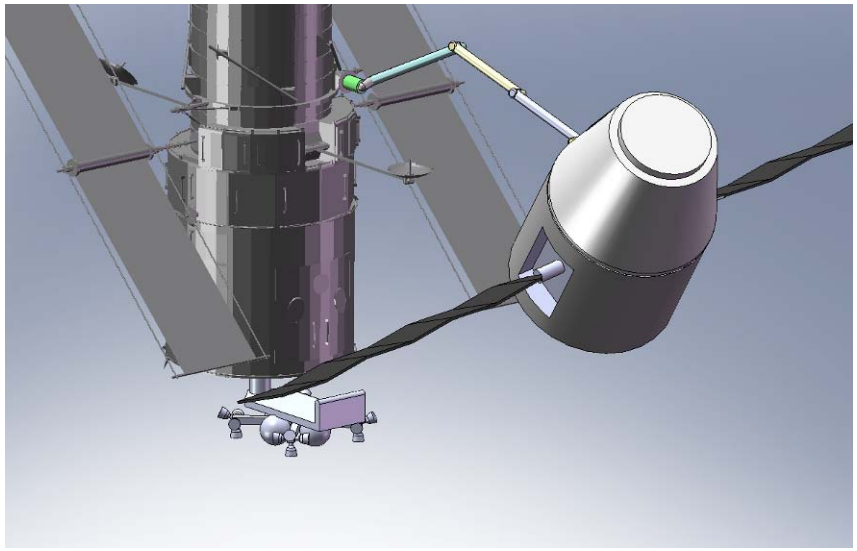

HST Servicing Case Study (9 of 9)

17. Release arm from grapple fixture and maneuver away
18. Perform HST Reboost/Deorbit using Propulsion Module

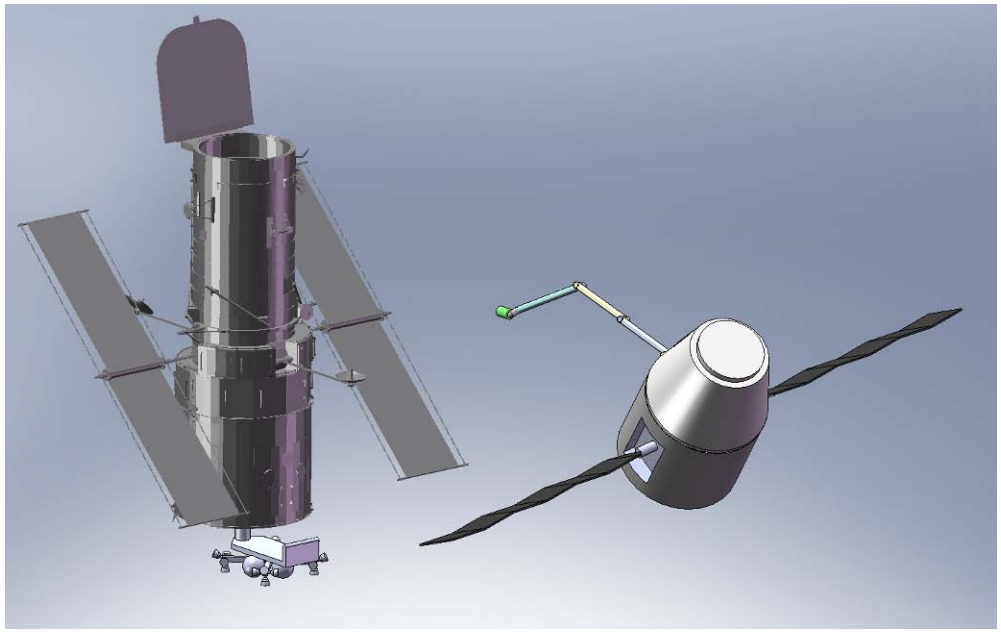

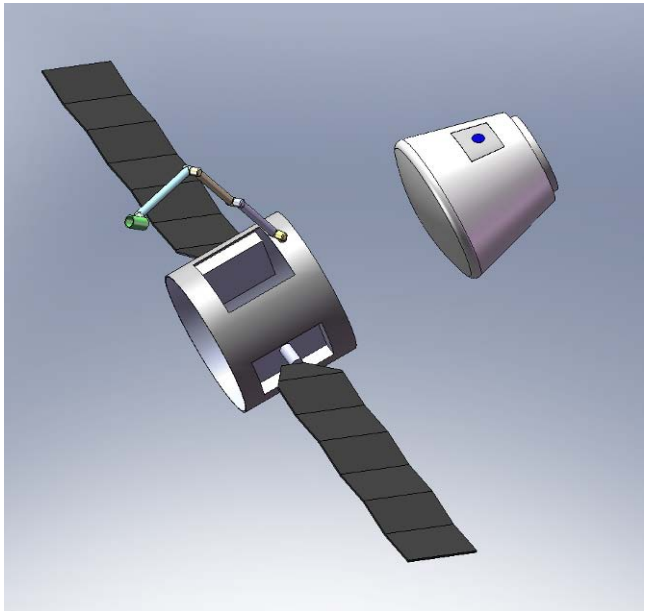

19. Jettison trunk and perform Entry, Descent & Landing (EDL) operations

Summary - Dragon for Servicing Missions

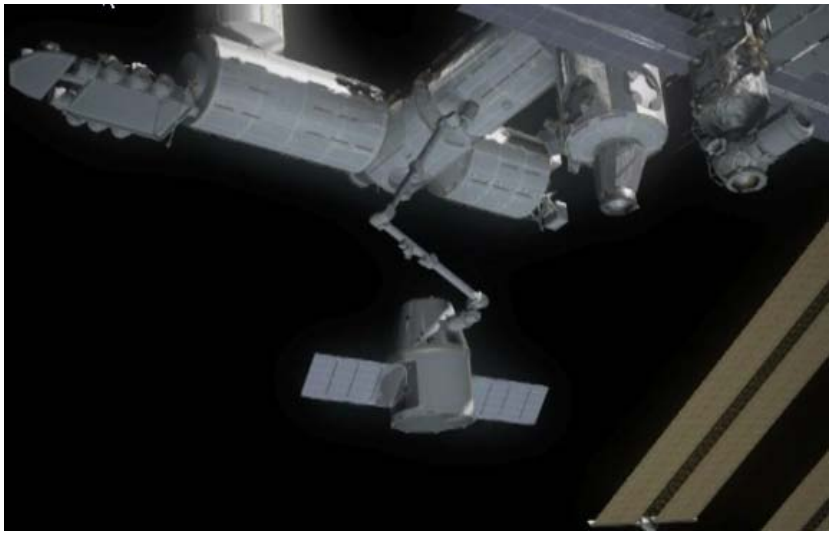

- ISS Dragon first flight mid-2010
  - First ISS visit early 2011
- Dragon is already performing most of the essential functions required from a servicing platform
- Both Robotic & Crewed servicing scenarios can be supported
- Alternate capsule structure could allow recovery of old instruments, tools and the robotic arm after a robotic servicing mission
- Total mission cost to support a robotic servicing mission is ~$80M
  - Including launch vehicle, Dragon spacecraft, operations & recovery
  - Does not include payloads (arm, instruments, tools etc.)
  - Could also deliver re/de-boost propulsion module

The Dawn of Commercial Space

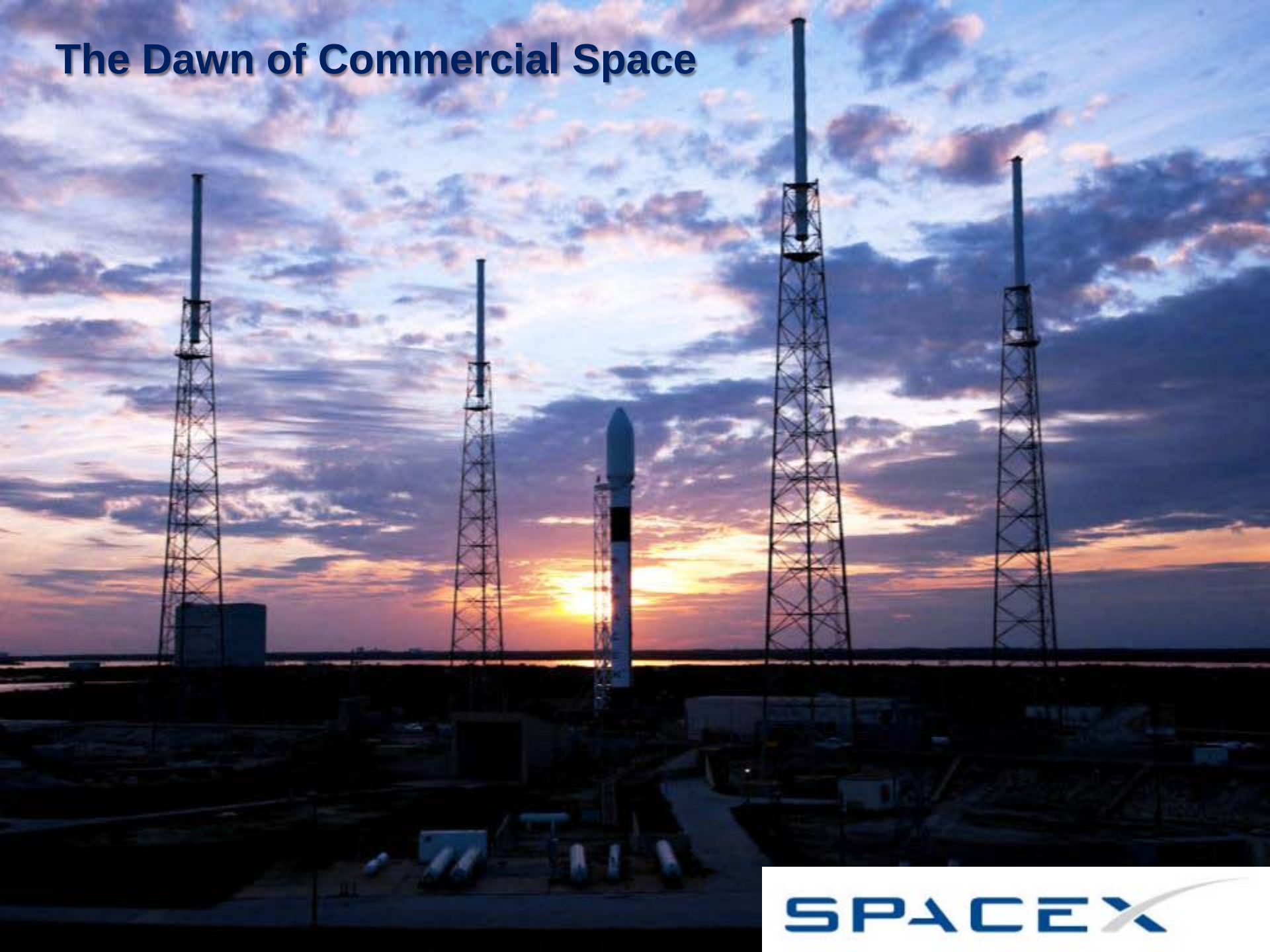

SPACEX